Transfer or duplication of this document as well as the utilization or communication of its contents are prohibited unless explicit authorization is granted. Violations will be liable for compensation. All rights reserved for patent, utility model or designs registrations. 未经许可擅自复制、传播本文档及其内容，不允许发布或用于专利、实用新型和外观设计的申请。

未注公差/General tolerances(mm)														
0 ~ 3	>3 ~ 6	>6 ~ 10	>10 ~ 18	>18 ~ 30	>30 ~ 50	>50 ~ 80	>80 ~ 120	>120 ~ 180	>180 ~ 250	>250 ~ 315	>315 ~ 400	>400 ~ 500	>500	0.1/10
±0.12	±0.18	±0.22	±0.26	±0.31	±0.37	±0.57	±0.80	±0.93	±1.05	±1.15	±1.60	±2.20	±2.50	∠ ±2°

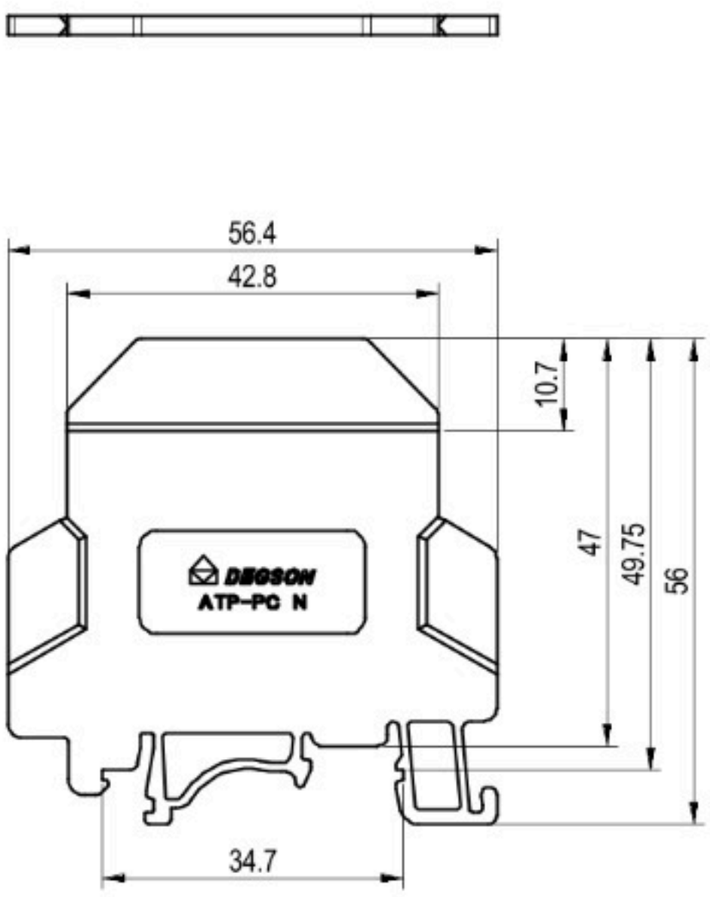



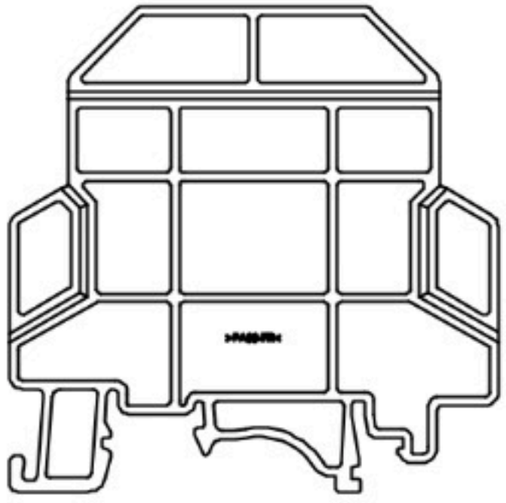

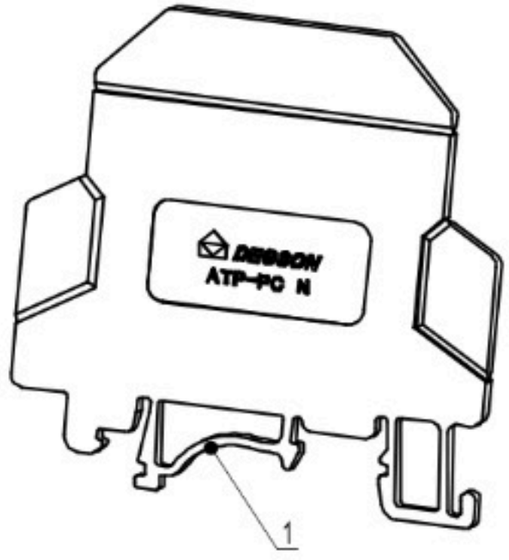

ITEM	NAME OF PART	MATERIAL	NOTES
1	Clapboard	PA66	UL94V-0

使用温度范围/Operating temperature(℃)	-40~+105
符合RoHS环保要求/Conform to RoHS	Yes
标准颜色编号/Standard color number: PANTONE / RAL	/

DEGSON

APPD:	李根劳	2022.10.17
CHKD:	马恩开	2022.10.17
DRFT:	邓启国	2022.10.17

A4 mm (inch)

MATERIAL: PA66 | SURFACE/COLOR:

MAT NO./REV: 11060000728-1 / 00 | MAT STATUS: 批量

NAME: ATP-PC N-01P-11-00A(H)

DRAWING NO.	TYPE	DRAWING STATUS	SCALE	SHEET
200099307	CUSTOMER DRAWING	已发布	1:1	1/1

REV	ECN	DESCRIPTION	DRFT	DATE
00		The first release	邓启国	2022.10.17